SCHEMATIC DIAGRAM – 1 (MAIN : MX-NH1000)

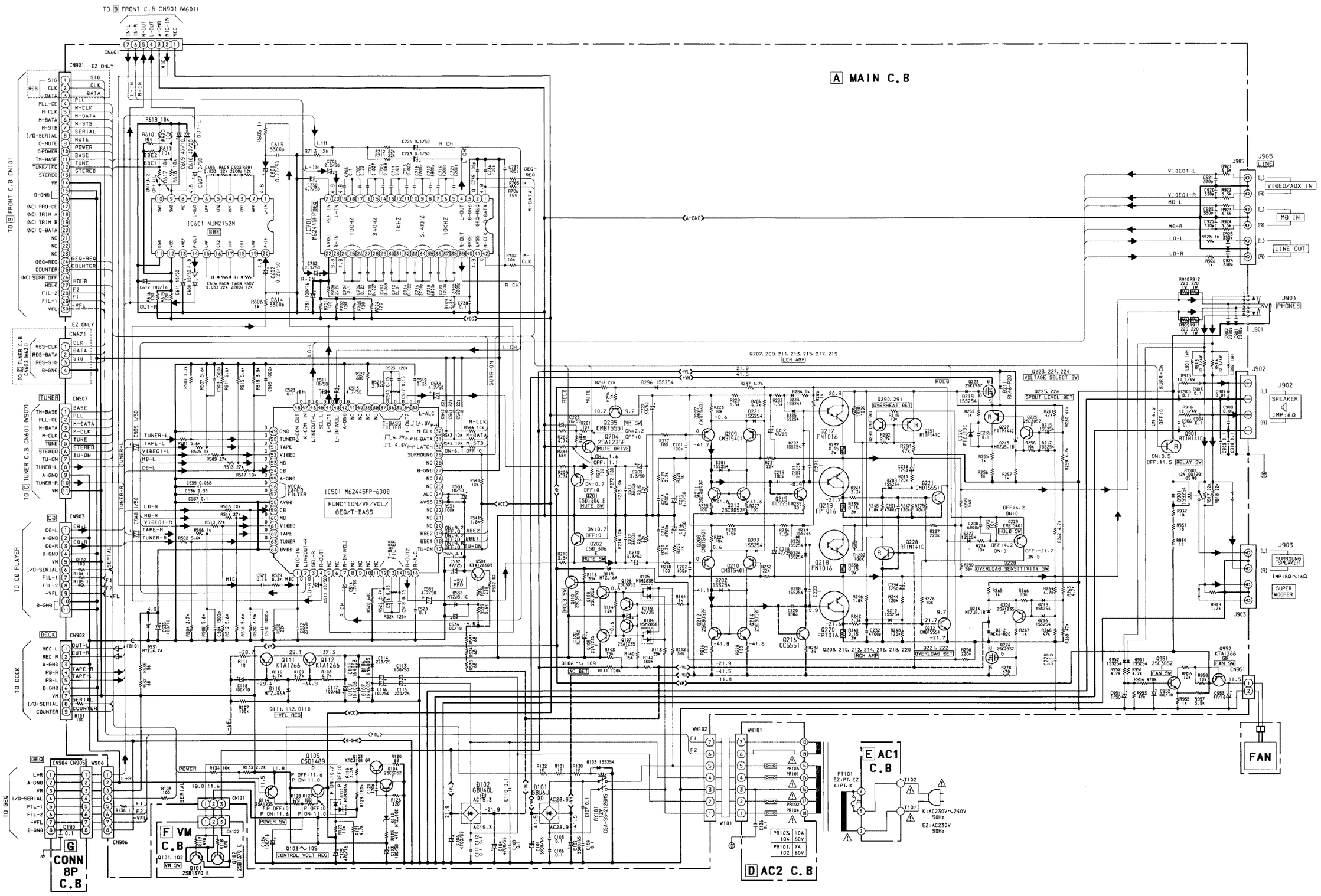

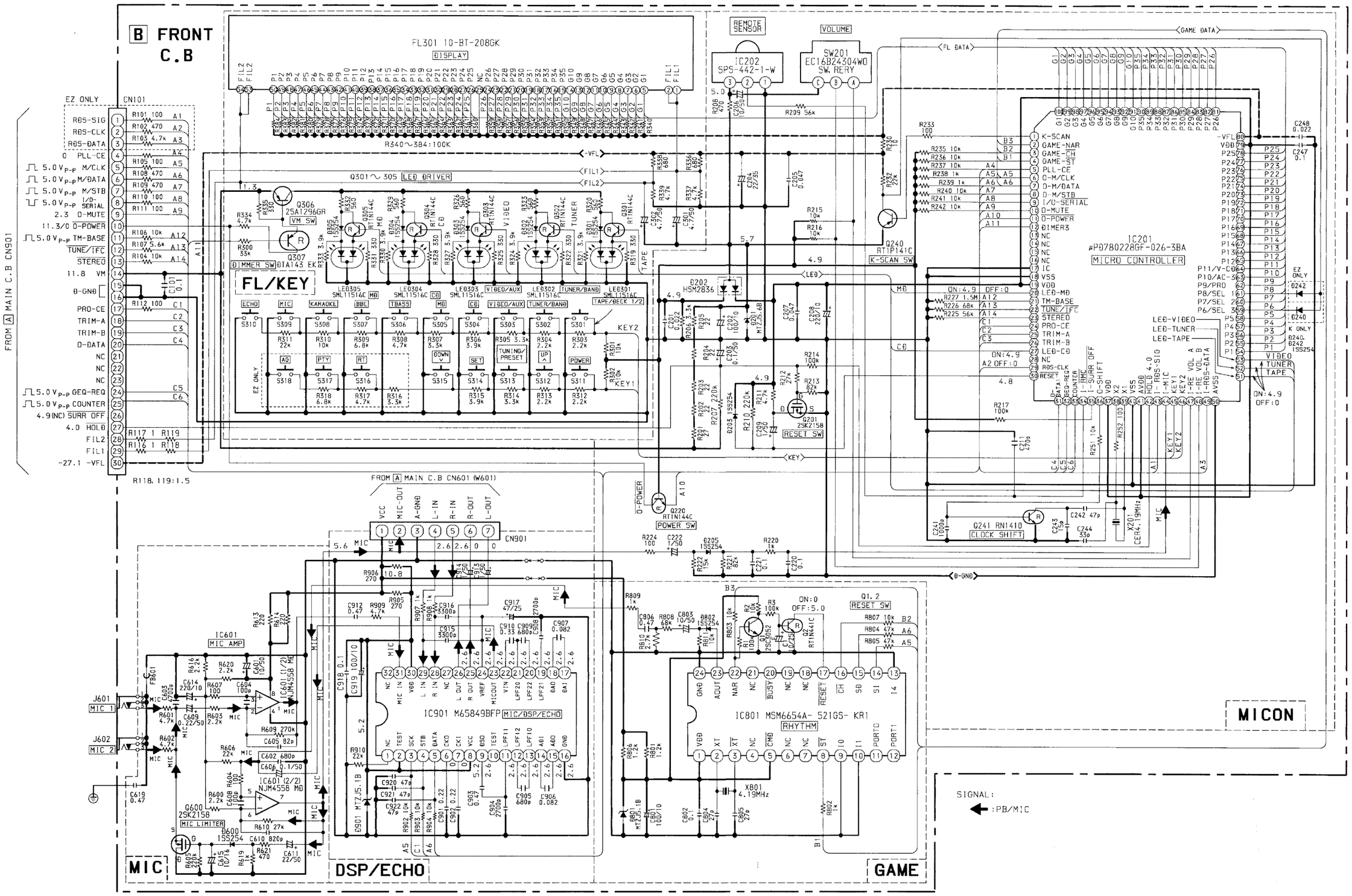
B FRONT C.B
FL301 10-BT-208GK
DISPLAY
REMOTE SENSOR
IC202 SPS-442-1-W
VOLUME
SW201 EC16B24304W0 SW. RERY
GAME DATA
FL DATA
EZ ONLY
CN101
FROM A MAIN C.B CN901
Q301 ~ 305 LED DRIVER
Q306 2SA1296GR
VM SW
Q307 DTA143 EK
DIMMER SW
FL/KEY
ECHO
MIC
KARAOKE
BBE
TBASS
MD
CD
VIDEO/AUX
TUNER/BAND
TAPE/DECK 1/2
TUNING/ PRESET
DOWN
SET
UP
POWER
AG
PTY
RT
KEY1
KEY2
Q240 RTIP141C
K-SCAN SW
Q202 HSM2836
Q201 2SK2158
RESET SW
IC201 μPD780228GF-026-3BA
MICRO CONTROLLER
K-SCAN
GAME-NAR
GAME-CH
GAME-ST
PLL-CE
O-M/CLK
O-M/DATA
O-M/STB
I/O-SERIAL
O-MUTE
O-POWER
DIMER3
LED-MD
TM-BASE
TUNE/IFC
STEREO
PRO-CE
TRIM-A
TRIM-B
LED-CD
RDS-CLK
RESET
LED-VIDEO
LED-TUNER
LED-TAPE
VIDEO
TUNER
TAPE
Q241 RN1410
CLOCK SHIFT
X201 CER4.19MHz
Q220 RTIN144C
POWER SW
CN901
VCC
MIC-OUT
A-GND
L-IN
R-IN
R-OUT
L-OUT
IC601 MIC AMP
IC601 (1/2) NJM4558 MD
IC601 (2/2) NJM4558 MD
J601 MIC 1
J602 MIC 2
Q600 2SK2158
MIC LIMITER
IC901 M65849BFP MIC/DSP/ECHO
IC801 MSM6654A- 521GS- KR1
RHYTHM
Q1, 2 RESET SW
X801 4.19MHz
MICON
MIC
DSP/ECHO
GAME
SIGNAL:
:PB/MIC

SCHEMATIC DIAGRAM – 3 (TUNER : MX-NH1000)

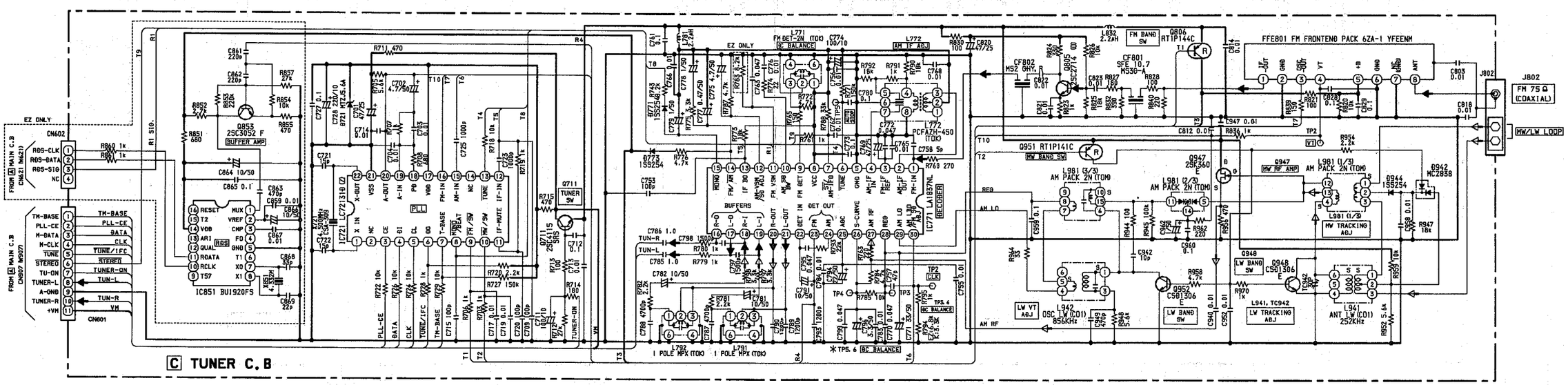
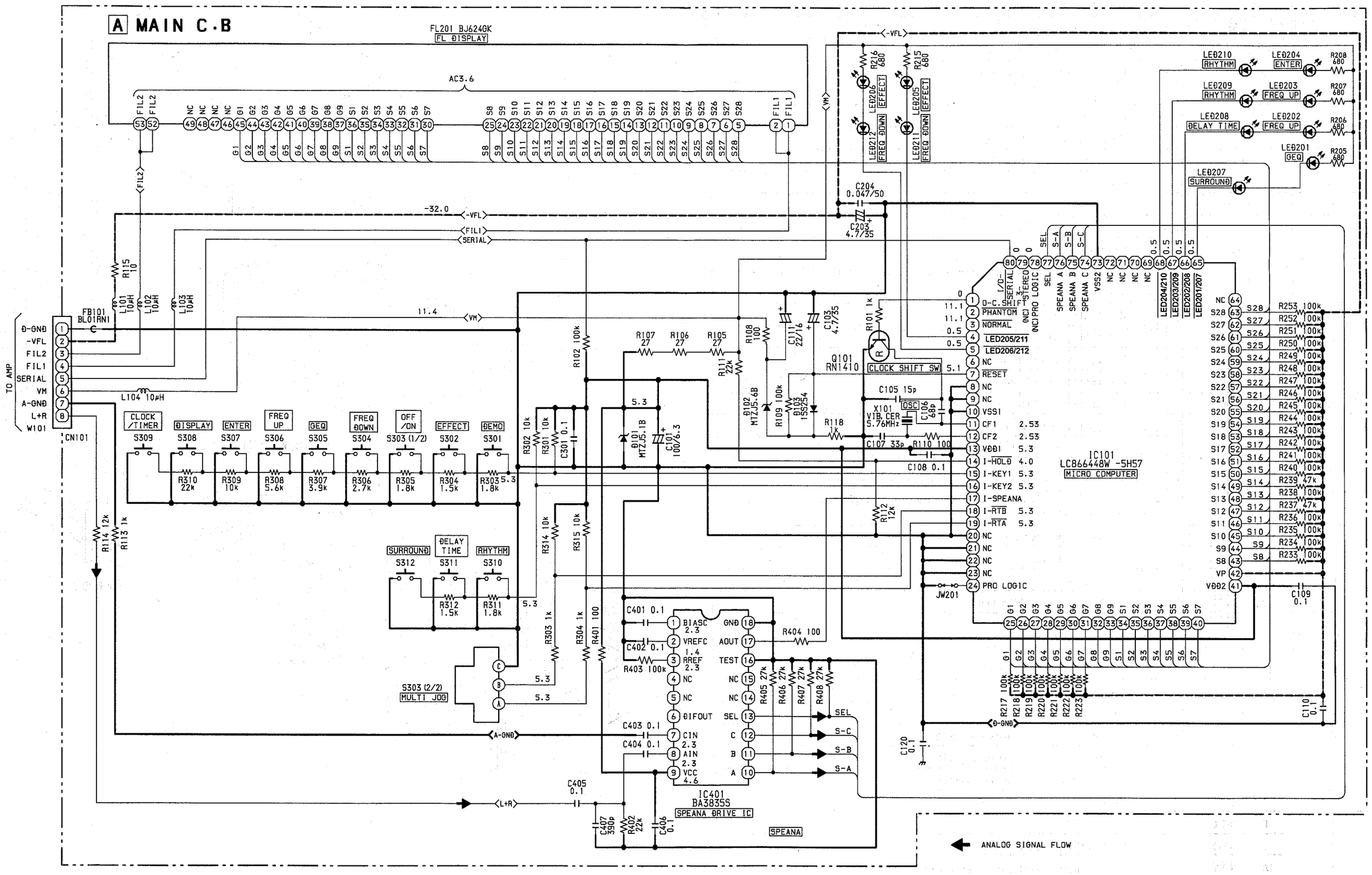
SCHEMATIC DIAGRAM (MAIN : GE-NH1000)